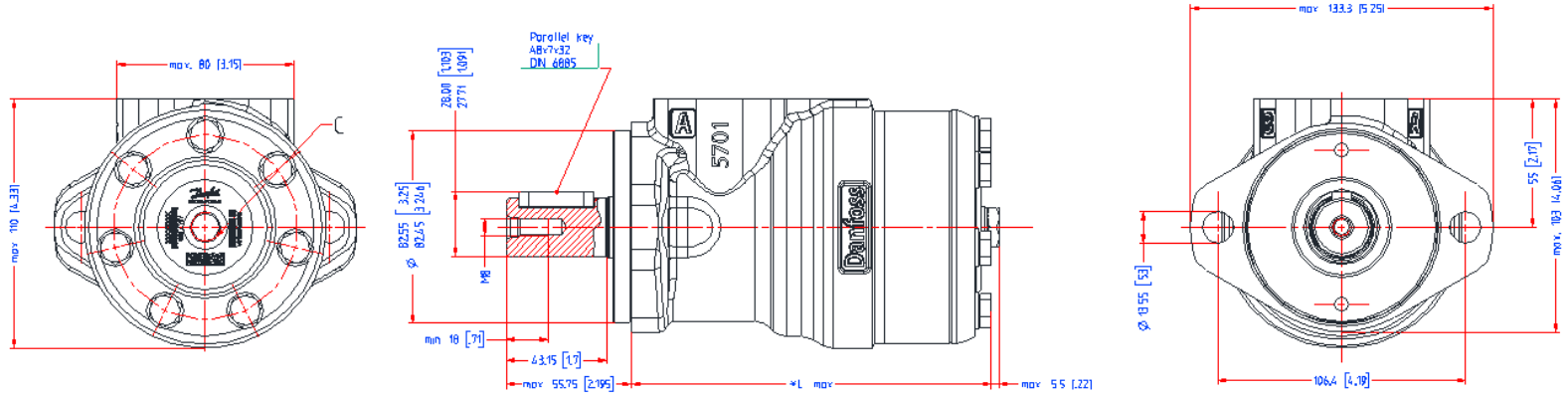

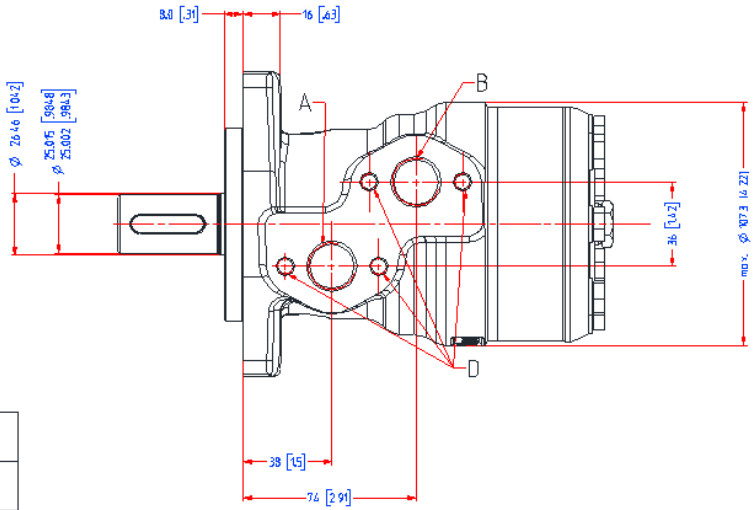

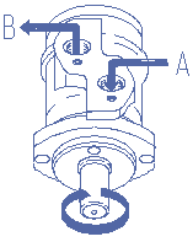

Code Number	CCM	*L.max mm./inch
11185537	50	137,8 [5,43]
11186671	80	142,8 [5,63]
11186674	100	142,8 [5,63]
11186655	125	146,2 [5,76]
11186658	160	150,6 [5,93]
11186665	200	156,6 [6,17]
11186667	250	163,6 [6,45]
11186652	315	172,3 [6,79]
11185531	375	179,8 [7,08]

Port connections: A, B	G1/2; min 15 [.59] deep
Drain connection: C (Plugged with steel plug)	G1/4; 12[.47] deep
Threaded connection holes D	M8; 13[.51] deep
Painting	Not painted

Tolerance for basic dimensions = ±1mm (0.04 inch)

Danfoss

		DATE	MAR.
	DRAWER		
	ENGINEER		
SCALE 1:1			
SHEET 1 OF 1			

Confidential Property of Danfoss (Hardbarg) A/S, Denmark. Not to be handed over to, copied or used by third party, fee - or three dimensional reproduction of contents to be authorized by Danfoss (Hardbarg) A/S. Danfoss (Hardbarg) A/S can accept no responsibility for possible errors on drawings. Danfoss (Hardbarg) A/S reserves the right to alter products already on order or provided that such alterations can be made without subsequential changes being necessary in specifications already agreed.

MOTOR-ORBITAL

DESIGNATION: OMR X

DOCUMENT NUMBER: ED073630