Reset | Download 3D Model

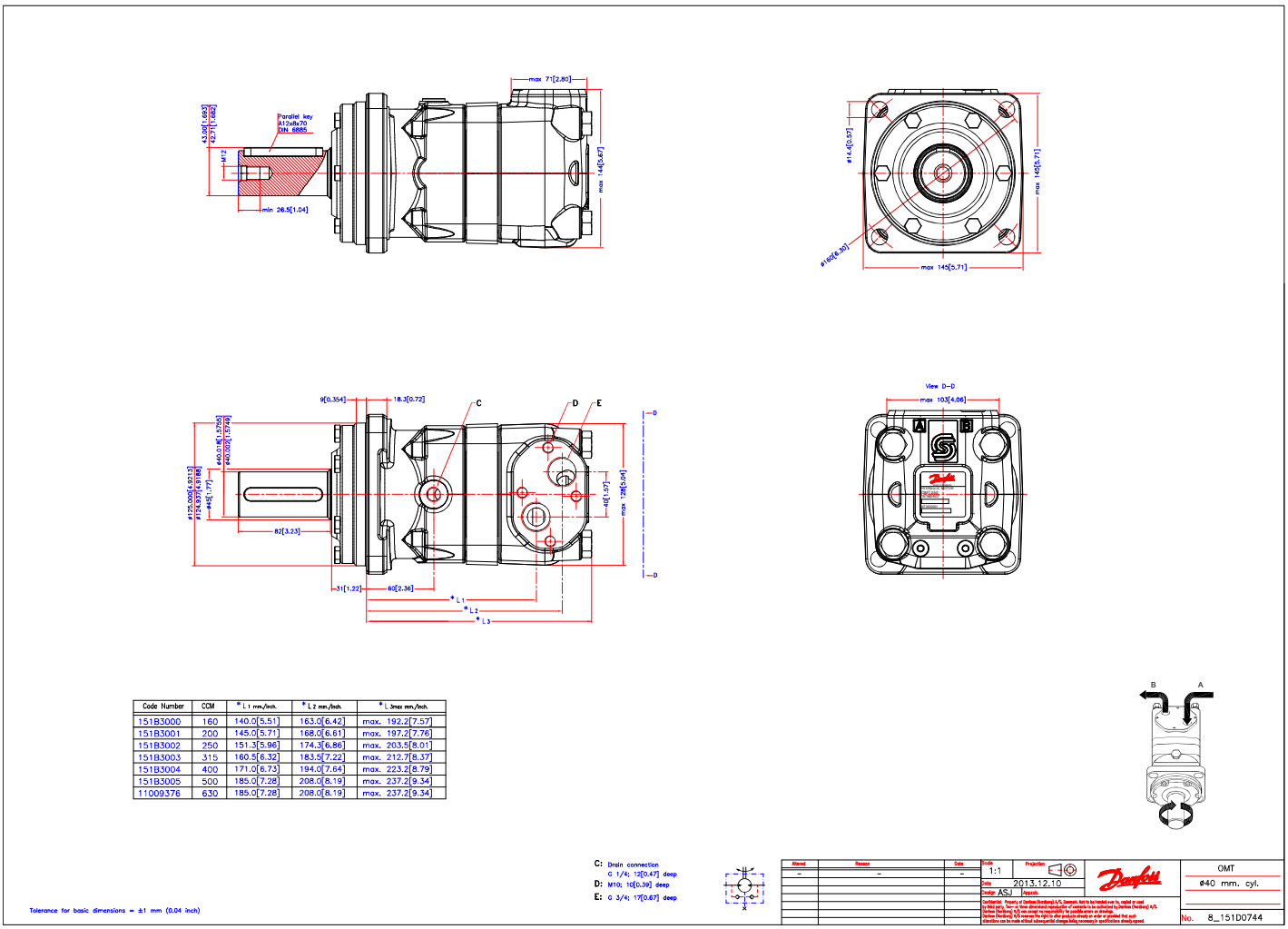

Code Number	CCM	* L 1 mm./inch.	* L 2 mm./inch.	* L 3max mm./inch.
151B3000	160	140.0[5.51]	163.0[6.42]	max. 192.2[7.57]
151B3001	200	145.0[5.71]	168.0[6.61]	max. 197.2[7.76]
151B3002	250	151.3[5.96]	174.3[6.86]	max. 203.5[8.01]
151B3003	315	160.5[6.32]	183.5[7.22]	max. 212.7[8.37]
151B3004	400	171.0[6.73]	194.0[7.64]	max. 223.2[8.79]
151B3005	500	185.0[7.28]	208.0[8.19]	max. 237.2[9.34]
11009376	630	185.0[7.28]	208.0[8.19]	max. 237.2[9.34]